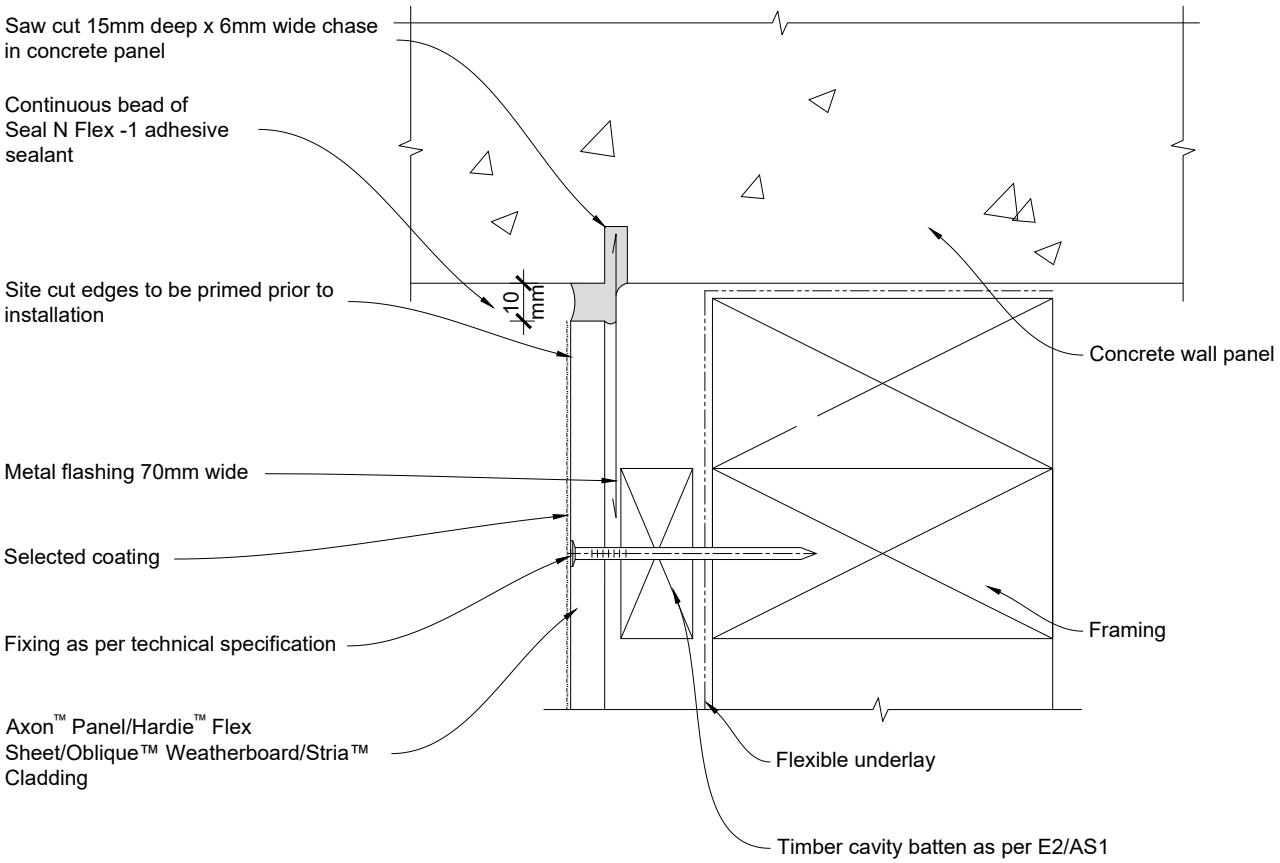

JamesHardie™
www.jameshardie.co.nz

Cladding Junction Detail

INTERNAL CORNER JUNCTION BETWEEN CONCRETE WALL AND AXON™ PANEL /HARDIE™ FLEX SHEET/OBLIQUE™ WEATHERBOARD/STRIA™ CLADDING

www.jameshardie.co.nz
CAD Scale 1:2

FIGURE: 26